Intelligent Digital Display Instrument

Apply to SF-D version



Features:

- The red LED display value of real time,maximum & minimum on the upper row,and the green LED display meansure unit or alarm value.
- The maximum 3 loop alarm output
- Many kinds of linear signal inputs or temperature sensor signals
- Analog analog,enabling conversion and calibration functions of measure range
- RS485 communication and Modbus-RTU protocol
- Power supply AC 100 ~ 240V
- Isolate DC24V feed output（30mA)。
- Peak Hold function,to facilitate record maximum, minimum measurement data
- easy to operate, economical and practical.

Version code: KKSF-D01E-A/0-20260929

The instruction explain instrument settings, connections,name and etc, please read carefully before you use the temperature controller.

I. Safety Caution

⚠ Warning

1) If the fault of the product or abnormal system lead to a serious accident, please set the appropriate circuit protection outside.
2) Before the connection completely, please do not power. Otherwise it may result in electric shock, fire, malfunction.
3) Do not use the product out of scope of specifications range. Otherwise, it may result in fire, malfunction.
4) Do not use in places with flammable and explosive gas.
5) Do not touch the site of high voltage power terminal site after power. Otherwise, there is danger of electric shock.
6) Do not disassemble, repair and modify this product. Otherwise,it may result in electric shock, fire, malfunction.

⚠ Caution

1) This product should not be used in a nuclear plant and medical equipment which associated with human life.
2) Some time,it will happen radio interference when the product uses in home environment.It should take adequate countermeasures.
3) This product has electric shock protection through improved insulation.And when using the product and connecting,it subject to compliance with specifications.
4) In order to avoid lighting surge,it should set appropriate surge suppression circuits when the product uses in the environment where the total cable lengh more than 30 metre.
5) The product uses in disk,and avoid to touch the part of high voltage,please take the necessary measure on the final product.
6) Please observe the precautions in this manual, otherwise there is risk of causing significant harm or accident.
7) Please observe the regulation when wiring.
8) To prevent to damage the machine and prevent to machine failure, the product is connected with power lines or large capacity input and output lines and other methods please install proper capacity fuse or other methods of protection circuit.
9) Please don't put metal and wire clastic mixed with this product,otherwise it may lead to electric shock, fire, fault.
10) Please tighten screw torque according to the rules.If not,it may lead to electric shock and fire.
11) In order not to interfere with this products to dissipate heat, please don't plug casing around the cooling vent hole and equipment.
12) Please don`t knock or rub the panel with rigid thing.
13) The readers of this manual should have basic knowledge of electrical,control, computer and communications.
14) The illustration, example of data and screen in this manual is convenient to understand,instead of guaranteeing the result of the operation.
15) In order to use this product with safety for long-term,regular maintenance is necessary. The life of some parts of the equipments are by some restrictions, but the performance of some will change for using many years.
16) Without prior notice, the contents of this manual will be change. We hope these is no any loopholes, if you have questions or objections, please contact us.

⚠ Caution of Install & Connection

1.Installation:

1) This product is used in the following environmental standards.
(IEC61010-1) [Overvoltage categoryⅡ、class of pollution 2]
2) This product is used in the following scope:surrounding environment, temperature, humidity and environmental conditions.
Temperature：0～50℃; Humidity：45～85%RH;Environment condition：Indoor warranty,The altitude is less than 2000m.
3) Please avoid using in the following places:
The place will be dew for changing temperature;with corrosive gases and flammable gas;with vibration and impact;with water, oil, chemicals, smoke and steam. facilities with Dust, salt, metal powder;and with clutter interference, static electric and magnetic fields, noise;where has air conditioning or heating of air blowing directly to the site.
4) On the occasion of the installation, please consider the following before installing several.

- In order to protect heat saturated, please ensure adequate ventilation space.
- Please consider connections and environment,and ensure that the products below for more than 50mm space.
- Please avoid to installed over the machine of the calorific value(Such as heaters, transformer, semiconductor operations, the bulk resistance).
- When the surrounding is more than 50℃, please using the force fan or cooling fans.But don't let cold air blowing directly to the product.
- In order to improve the anti - interference performance and security, please try to stay away from high pressure machines, power machines to install.
- Don`t install on the same plate with high pressure machine and the product.
- Please install power-driven machinery with adequate separation distance.

2. Cable caution:

1) Please use specified compensation wire in the place of TC input;Please use insulated TC if the measured device is heated metal.
2) Please use the cable of lesser resistance in the place of RTD input,and the cable(3 wire) must be no resistance difference,but the total length is within 5m.
3) In order to avoid the effect of noise,please put the input dignal away from meter cable,power cable,load cable to wiring.
4) In order to reduce the power cables and the load power cables on the effect of this product,please use noise filter in the place where easy to effect.You must install it on the grounding of the disk if you use the noise filter,and make the wiring to be shortest between noise filter output side and power connectors.Don`t install fuse and switch on the wiring of noice filter output side,otherwise it will reduce the effect of noise filter.
5) It takes 5s from input power to output.If there is a place with interlocking actions circuit signal,please use timer relay.
6) Please use twisted pair with a shield for analog output line,to ensure the reliabilty of signal.
7) Please use twisted pair with a shield for remote RS485 communication cable,and deal with the shield on the host side earth,otherwise it will reduce the effect of noise filter.
8) This product is not the fuse;please set according to rated voltage 250V,rated current 1A if you need;fuse type:relay fuse.
9) Please use the suitable screw force and crimp terminal.
The screw terminal size: M3X8 (with 6.8X6.8 square base)
Recommended tightening torque: 0.4N.m
Proper cables：0.25～1.65mm single cable/multiple core cable

Ⅱ.Model Illustration

SF 8 □ - I R 2 8 B T - D

- D：Version
- T:Temperature sensor input Blank:Voltage, current input
- B: DC 24V auxiliary voltage Blank:No
- 0: single input without RS485 8：Single input with RS485
- Blank: No alarm 2: 2 loop alarm 3: 3 loop alarm
- A: No alarm R: Relay alarm output
- I: DC 4-20mA analog output Blank:No alalog
- Blank: AC 100～240V F: DC 24V
- 4: 48W*48H 6: 48W*96H 7: 72W*72H
- 8: 96W*48H 9: 96W*96H
- SF series digital display instrument

Ⅲ.Order Information

Model	Signal input	Alarm	Auxiliary voltage	Analog output	Analog output
SF□□-A0	4~20mA/0~10V				
SF□□-R20B	4~20mA/0~10V	2	●		
SF□□-R28B	4~20mA/0~10V	2	●		●
SF□□-IRC20B	4~20mA/0~10V	2	●	●	
SF□□-IRC28B	4~20mA/0~10V	2	●	●	●
SF□□-A0-T	TC/RTD/mV/RT				
SF□□-R20B-T	TC/RTD/mV/RT	2	●		
SF□□-R28B-T	TC/RTD/mV/RT	2	●		●
SF□□-IR20B-T	TC/RTD/mV/RT	2	●	●	
SF□□-IR28B-T	TC/RTD/mV/RT	2	●	●	●

Ⅳ.Specification

1.Electrical parameters

Sample rate	4SPS
Relay capacity	AC 250V /3A life of rate load>100 thousand times
Power supply	AC 100 ~ 240V 50/60Hz DC 24V
Power consumption	<10VA
Environment	Indoor temperature:0 ~ 50℃ no condensation; Humidity: < 85%RH; Altitude<2000m
Storage environment	-10 ~ 60℃, no condensation
Current output	DC 4 ~ 20mA load < 500Ω，Temperature drift 250PPM
Auxiliary output	DC 24V ±10%（at maximum power consumption)，≤30mA
Communication port	RS485 port Modbus-RTU procotol, maximum input:30 units
Insulation impedance	Input,output,power cabinet > 20MΩ
ESD	IEC/EN61000-4-2 Contact ±4KV /Air ±8KV perf.Criteria B
Pulse traip anti-interference	IEC/EN61000-4-4 ±2KV perf.Criteria B
Lightning surge	IEC/EN61000-4-5 ±2KV perf.Criteria B
Frequency drop	IEC/EN61000-4-29 0% ~ 70% perf.Criteria B
Dielectric strength	Signal input & output & power 3000VAC 1min, < 60V Low voltage circuit between AC500V/min
Total weight	About 400g
Material of case	The case and panel frame PC/ABS (Flame Class UL94V-0)
Material of mark	PET(F150/F200)
Power-off data protection	10 years，times of writing:1 million times
Protection level of panel	IP65(IEC60529)
Safety Standard	IEC61010-1 Overvoltage category Ⅱ，pollution level 2，levelⅡ(Enhanced insulation)

2.Signal parameters

Input	Symbol	Range ℃	Range ℉	Ratio	Accuracy	Input impedance/ auxiliary current	Code
K1	K1	-50 ～ 1200	-60 ～ 2200	1℃	0.3%F.S±1℃	>1MΩ	0
K2	K2	-50.0 ～ 999.9	-60.0 ～ 999.9	0.2℃	0.3%F.S±1℃	>1MΩ	1
J1	J1	0 ～ 1200	0 ～ 2200	1℃	0.3%F.S±1℃	>1MΩ	2
J2	J2	0.0 ～ 999.9	0 ～ 999.9	0.2℃	0.3%F.S±1℃	>1MΩ	19
E1	E1	0 ～ 850	0 ～ 1500	1℃	0.3%F.S±1℃	>1MΩ	3
E2	E2	0.0 ～ 850.0	0 ～ 999.9	0.3℃	0.3%F.S±1℃	>1MΩ	20
T1	t1	-50 ～ 400	-60 ～ 750	1℃	0.3%F.S±1℃	>1MΩ	4
T2	t2	-50.0 ～ 400.0	-60.0 ～ 750.0	0.4℃	1%F.S±2℃	>1MΩ	21
B	b	250 ～ 1800	250 ～ 3200	1℃	1%F.S±2℃	>1MΩ	6
R	r	-10 ～ 1700	-10 ～ 3000	1℃	1%F.S±2℃	>1MΩ	7
S	S	-10 ～ 1600	-10 ～ 2900	1℃	1%F.S±3℃	>1MΩ	8
N1	n1	-50 ～ 1200	-60 ～ 2200	1℃	0.3%F.S±1℃	>1MΩ	5
N2	n2	-50.0 ～ 999.9	-60 ～ 999.9	0.2℃	0.3%F.S±1℃	>1MΩ	22
PT100-1	Pt1	-200.0 ～ 600.0	-200.0 ～ 999.9	0.2℃	0.3%F.S±1℃	0.33mA	9
PT100-2	Pt2	-200 ～ 600	-300 ～ 1100	1℃	0.3%F.S±1℃	0.33mA	23
JPT100-1	JPt1	-200.0 ～ 500.0	-200.0 ～ 900.0	0.2℃	0.3%F.S±1℃	0.33mA	24
JPT100-2	JPt2	-200 ～ 500	-300 ～ 900	1℃	0.3%F.S±1℃	0.33mA	25
CU50-1	Cu51	-50.0 ～ 150.0	-60.0 ～ 300.0	0.2℃	0.5%F.S±3℃	0.33mA	10
CU50-2	Cu52	-50 ～ 150	-60 ～ 300	1℃	0.5%F.S±3℃	0.33mA	26
CU100-1	Cu01	-50.0 ～ 150.0	-60.0 ～ 300.0	0.2℃	0.5%F.S±3℃	0.33mA	11
CU100-2	Cu02	-50 ～ 150	-60 ～ 300	1℃	0.5%F.S±3℃	0.33mA	27
0 ～ 50mV	0-50	-1999 ～ 9999		12bit	0.3%F.S±3digits	>1MΩ	12
0 ～ 400Ω	rt	-1999 ～ 9999		12bit	0.3%F.S±3digits	0.33mA	13
0 ～ 10V	0-10	-1999 ～ 9999		12bit	0.3%F.S±3digits	>1MΩ	14
4 ～ 20mA	4-20	-1999 ～ 9999		12bit	0.3%F.S±3digits	<50Ω	15
0 ～ 5V	0-5	-1999 ～ 9999		12bit	0.5%F.S±3digits	>1MΩ	16
1 ～ 5V	1-5	-1999 ～ 9999		12bit	0.5%F.S±3digits	>1MΩ	17
0 ～ 20mA	0-20	-1999 ～ 9999		12bit	0.3%F.S±3digits	<50Ω	18

*: Please specify signal input requirement when ordering.
Temperature drift: 150ppm/℃
Note1: An additional 2°C cold-junction compensation tolerance shall be applied when using internal cold-junction compensation for thermocouple input.
Note2: Type-B thermocouple can measure within 250~600°C, yet calibration accuracy is not guaranteed. Measuring accuracy is guaranteed from 600°C to 1800°C.

4. Isolation diagram:

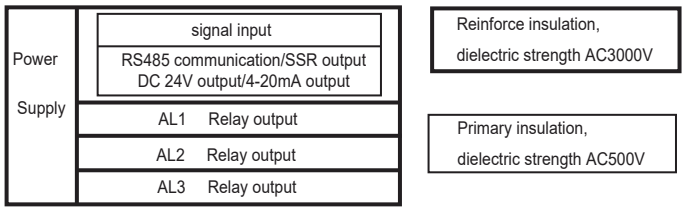

IV. Panel Illustration

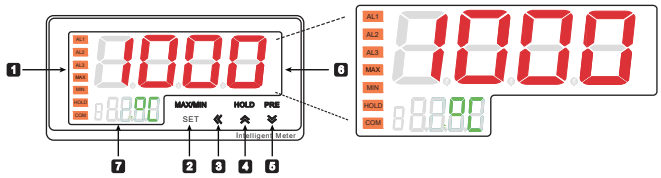

No.	Symbol	Name	Function Description
1	AL1	Alarm 1	1st loop alarm output. Lit - alarm ON Off - alarm OFF
	AL2	Alarm 2	2ND loop alarm output. Lit - alarm ON Off - alarm OFF
	AL3	Alarm 3	1st loop alarm output. Lit - alarm ON Off - alarm OFF
	MAX	Max value	MAX Indicator lit: PV displays max value
	MIN	Min value	MIN Indicator lit: PV displays min value
	HOLD	Hold value	HOLD Indicator lit: PV displays hold value.
	COM	Communication	Comm. Indicator: Flashes continuously when communicating
2	SET	SET key	Browse menus in sequence, confirm parameter modification, switch max / min / current PV
3	«	Modify / shift key	Activate parameter modification, shift edit bit left
4	⩓	Add / hold key	Increase value of flashing digit, hold instantaneous measured value
5	⩔	Down key	Decrease value of flashing digit, browse menus in reverse order, restart max-min recording
6	PV	Upper display	Displays current value, max value, min value, parameter symbols and error prompts
7	SV	Lower display	Displays measurement unit, parameter values, alarm values and transmit output values

VI. Unit Symbol Comparison Table

No.	Symbol	Unit	No.	Symbol	Unit	No.	Symbol	Unit
0	_	None	12	U	W	24	A	A
1	m	M	13	KW	KW	25	KA	KA
2	cm	cm	14	RPM	RPM	26	Ω	Ω
3	mm	mm	15	RPS	RPS	27	KΩ	KΩ
4	kg	kg	16	MPM	MPM	28	℃	℃
5	g	g	17	MPS	MPS	29	℉	℉
6	mg	mg	18	Hz	Hz	30	K	K
7	MPA	Mpa	19	KHz	KHz	31	KPA	Kpa
8	pa	pa	20	mV	mV	32	PSI	PSI
9	ba	ba	21	V	V	33	N.m	N.m
10	mba	mba	22	KV	KV	34	MΩ	MΩ
11	N	N	23	mA	mA			

Ⅶ.Operation and Menu Direction

1.Operation of normal menu and shielding menu

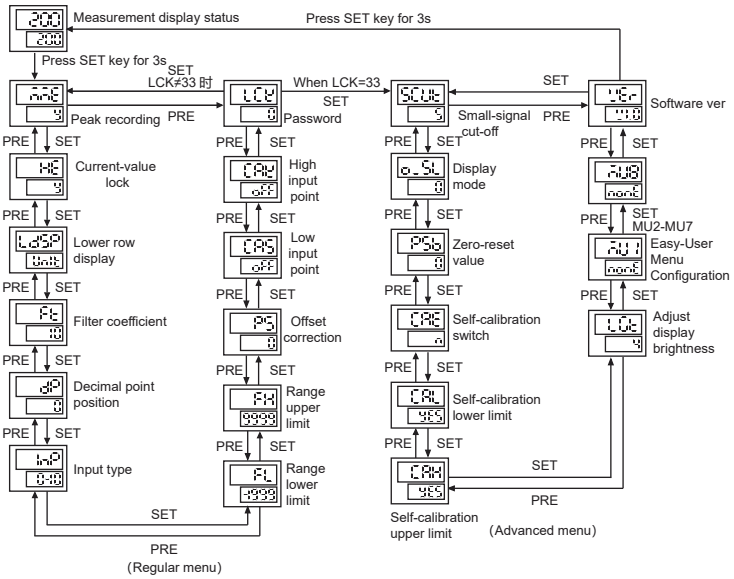

2. Menu shield function progress illustration

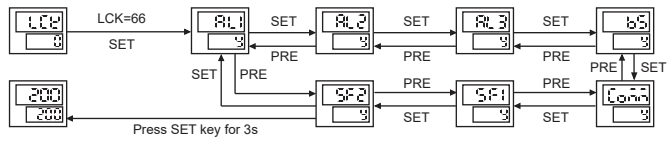

Menu shield function,the specification of function symbol as below:

AL1: AD1, AL1, HY1, AE1, DL1A, DL1B
AL2: AD2, AL2, HY2, AE2, DL2A, DL2B
AL3: AD3, AL3, HY3, AE3, DL3A, DL3B
BS: BRL, BRH, OLL, OLH, TEST
COMM: BAUD, ADDR, PRTY, DTC
SF1: SQRT, MEMO
SF2: DREF, STEP, CJC, RLMR

When it display one of function symbol,bottom row will display "Y" or "N"
(Y means start the function;N means stop the function)
For example:if the meter have no first alarm circuit,please set the AL1 to "N" and then exit menu.
But now,the menu and submenu will not display AL1, AD1, HY1, AE1, DL1A, DL1B and the alarm function stop to work.

3. Regular menu description

Menus are hidden based on model & settings Menus are always displayed irrespective of model & settings

No.	Symbol	Name	Description	Setting range	Factory setting
	PSW	**PSW**	Full-menu password. Enter 0033 to access regular menu	0~9999	0
1	MME	**MME**	Max-Min Recording Function (MME) Y = Enable, N = Disable When MME=Y: Short-press SET on measurement screen to cycle PV / MAX / MIN. When MAX/MIN is displayed, short-press ⩔ key to reset max-min recording; MAX & MIN will be set to current value	0 (N) 1 (Y)	N
2	HE	**HE**	Current-value lock function. Y=Enable, N=Disable When HE=Y: Short-press ⩓ key on measurement screen to lock current display value, short-press again to unlock.	0 (N) 1 (Y)	N
3	AD1	AD1	Optional 4types alarm.0:alarm close. L:low limit alarm H:high limit alarm;Int:interval alarm; Out:outside the interval	0, L, H, Int, Out	L
4	AL1	AL1	1st alarm setting value	FL~FH	200
5	AH1	AH1	Scope of setting value for 1st alarm	FL~FH	1000
6	HY1	HY1	1st alarm backlash value	0~1000	1
7	AD2	AD2	Optional 4 types alarm,if it is 0,the alarm close	0, L , H, Int, Out	H
8	AL2	AL2	2nd alarm setting value	FL~FH	600
9	AH2	AH2	Scope of setting value for 2nd alarm	FL~FH	1000
10	HY2	HY2	2nd alarm backlash value	0~1000	1
11	AD3	AD3	Optional 4 types alarm,if it is 0,the alarm close	0, L , H, Int, Out	H
12	AL3	AL3	3rd alarm setting value	FL~FH	800
13	AH3	AH3	Scope of setting value for 3rd alarm	FL~FH	1000
14	HY3	HY3	3rd alarm backlash value	0~1000	1
15	LDSP	**LDSP**	Choice of display on botton row:no display, engineering unit,1loop/2loop/3loop alarm value.	Non, Unit, AL1 AL2, AL3, SV	Unit
16	FT	**FT**	Filter coefficient of digital filters. The higher of value, the greater the filter effect.	1~255	10
17	dREF	**DREF**	Display refresh cycles,unit:s	0~5	0
18	dP	**DP**	Decimal location for linear signal	0~3	0
19	InP	**INP**	Input signal types	Refer to signal table (P2)	0~10V/K1
20	FL	**FL**	Measured low limit, the setting value must less than measured high limit		0/-50
21	FH	**FH**	Measured high limit,the setting value must more than measured low limit		1000/1200
22	PS	**PS**	Offset-correction mode (Default): Shows display offset correction value. Direct-display via communication mode: Shows comm-direct-display value. PV window stops showing measured value, and displays value written to PS register via communication.*(Switch mode by setting PSM register through communication)*	-1999~9999	0
23	CAS	CAS	Low-input point display value: Set display value for low-input point. When FL < FH: Press ⩔ key to reduce CAS; function disabled when CAS=OFF. When FL > FH: Press ⩓ key to increase CAS; function disabled when CAS=OFF. Prior to CAS/CAK calibration, long-press SET +⩔ key (confirm PSB=0)	OFF, FL ~ FH	OFF
24	CAK	CAK	High-input point display value: Set display value for high-input point. When FL < FH: Press ⩔ key to reduce CAK; function disabled when CAK=OFF. When FL > FH: Press ⩓ key to increase CAK; function disabled when CAK=OFF. Prior to CAS/CAK calibration, long-press SET +⩔ key (confirm PSB=0)	OFF, FL ~ FH	OFF
25	LCK	**LCK**	Password, LCK=01,unit lock; LCK=10,menu lock; LCK=11, unit & menu lock; LCK=33, it can enter class 2 menu; LCK=5555, it will restore factory setting.	0~9999	0

4. Advanced menu

No.	Symbol	Name	Description	Setting range	Factory setting
26	SCUt	**SCUT**	Small Signal Elimination,please refer description of o_SL for details	-1999~9999	5
27	o_SL	**o_SL**	Display of choice.o_SL=0, no function , o_SL=1, measured value<FL, display FL; measured value>FH, display FH. o_SL=2, measured value< SCUT/FL and display FL; measured value>FH,display FH. o_SL=3,measured value<SCUT, display the min value between FL & SCUT; measured value>FH, display FH. 2)When FL > FH (Adjust SCUT per actual application): o_SL=1: Measured value > FL → display FL; Measured value < FH → display FH. o_SL=2: Measured value > SCUT or FL → display FL; Measured value < FH → display FH. o_SL=3: Measured value > SCUT → display max(FL,SCUT) Measured value < FH → display FH.	0~3	2
28	PSb	**PSb**	Zero value,long press SET + ⩓ key to clear the display value, now,zero value will save on PSb. If you preset the zero value, please long press SET + ⩔ key or modify PSb to zero. (The function is non-effective on temperature signal)	-1999~9999	0
29	MEMo	**MEMO**	Max/min power failure protection.Y: open, N:Close	0 (N) 1 (Y)	N
30	SQRt	SQRT	linear signal Square root (reserve)	0 (N) 1 (Y)	N
31	StEP	STEP	Display jumping interval, set min step for display change	1~10	1
32	brM	BRM	Transmission mode PV (0): PV transmission output. Linear 4.00-20.00mA output according to PV display value; range FL-FH. SV (1): SV transmission output. Lower-line shows transmission setpoint (LDSP = SV). SV range 4.00-20.00, output 4.00-20.00mA.	PV, SV	PV
33	brL	BRL	Analog output lower limit (4mA)	FL~FH	FL
34	brH	BRH	Analog output upper limit (20mA)	FL~FH	FH
35	oLL	OLL	Adjust analog output low limit OLL=(preset analog low limit - actual analog low limit)/ actual analog range*1000	-500~1000	0
36	oLH	OLH	Adjust analog output high limit adjustment OLH=(preset analog high limited - actual analog high limit)/ actual analog range *1000+1000	0~1050	1000
37	bAUd	BAUD	Communication baud rate	4.8K、9.6K、19.2K、38.4K、57.6K、115.2K	9.6K
38	Addr	ADDR	Meter communication address	1~255	1
39	Prty	PRTY	PRTY Communication parity check 0: (NO) No check 1: (ODD) Odd check 2: (EVEN) Even check	NO, ODD, EVEN	NO

Continued

No.	Symbol	Name	Description	Setting range	Factory setting
40	dtC	DTC	Communication delay time	Refer to Comm. note (P9)	0
41	AE1	AE1	AL1 extensions	0~11	0
42	AE2	AE2	AL2 extensions	0~11	0
43	AE3	AE3	AL3 extensions	0~11	0
44	dL1A	DL1A	AL1 start delay(unit:s)	0~999.9	0.0
45	dL1b	DL1B	AL1 close delay(unit:s)	0~999.9	0.0
46	dL2A	DL2A	AL2 start delay(unit:s)	0~999.9	0.0
47	dL2b	DL2B	AL2 close delay(unit:s)	0~999.9	0.0
48	dL3A	DL3A	AL3 start delay(unit:s)	0~999.9	0.0
49	dL3b	DL3B	AL3 close delay(unit:s)	0~999.9	0.0
50	CJC	CJC	Thermocouple cold end compensation method, auto-compensation, close compensation, manual compensation	-1 (Auto), 0 (Off) , 1~50	Auto
51	rLRr	RLMR	linear resistance value, useable when linear resistance is high (Unit: mΩ)	0~9999	0
52	tESt	TEST	Analog input test, used to test output function	FL~FH	OFF
53	CAE	**CAE**	Enable user`s self-calibration, this parameter is for linear signal only; Y: use the parameter self-calibrated by user; N: don`t use the parameter self-calibrated by user	0 (N), 1 (Y)	N
54	CAL	**CAL**	User set the low-limit input by themselves; after input the low-limit signal, flash display YES, press SET to confirm, when it display OK, the input signal low-limit is set.	YES/OK	YES
55	CAH	**CAH**	User set the high-limit input by themselves; after input the high-limit signal, flash display YES, press SET to confirm, when it display OK, the input signal high-limit is set.	YES/OK	YES
56	LGt	**LGT**	Brightness adjustment: the higher the value, the brighter the display.	1~8	4
57	AU1	**MU1**	Easy-User Menu: Supports mapping of regular menu items. Function activates when any item ≠ NONE. Long-press SET on monitoring screen to enter menu; the pre-configured menu mirror will show first.	NONE, MME~VER	NONE
58	AU2	**MU2**			
59	AU3	**MU3**			
60	AU4	**MU4**			
61	AU5	**MU5**			
62	AU6	**MU6**			
63	AU7	**MU7**			
64	AU8	**MU8**			
65	VEr	**VER**	Software version	Can`t be change	--

1. High/low point display setting function
Example: use electronic ruler or others to measure distance, if want position 5mm display 500, position 6mm display 600, firstly enter function shielding menu to set SF1= Y(open CAS, CAK parameter), then while the position is at 5mm, enter the menu to set CAS=500; while the position is at 6mm, enter the menu to set CAS=600. After exit the menu, it will corresponding indicate 500~600 between 5mm and 6mm.
2. Linear signal self-calibration function
a) Set INP type, and make sure it is one of the linear signal.
b) The input signal should be applied to the correct input channel.
c) Enter low limit calibration menu CAL, press " 《 " to flash " YES " . After adjusting the input signal to the minimum value, then input it to the meter.
d) When "YES" flashing, and the minimum value of input signal has been inputed into the meter; press "SET " to confirm and save calibration value.
e) After the low limit is calibrated, enter high limit calibration menu CAH, and flash "YES" in the same way.
f) Adjust the input signal to the maximum value, and input it into the meter. And when "YES" flashing, press " SET " to confirm and save calibration value of high limit.
g) After calibration, enter CAE to change "N" into "Y" to enable self-calibration; otherwise, it will use the default calibration value.
h) The calibrated high limit input value of linear signal should not fall outside the input standard range ±10%.
i) After the calibration, if the result is not satisfactory, it can be recalibrated.
3. Analog range calibration function
Example: actual high limit is 20.4mA, low limit is 3.97mA. To calibrate the analog range through the modification of OLL, OLH.
OLL= (Preset analog low limit - actual analog low limit)/ actual analog range*1000 =(4.0 - 3.97)/(20.4 - 3.97) * 1000 = 2
OLH= (Preset analog high limit - actual analog high limit)/ actual ananlog range*1000+1000 = (20.0 - 20.4)/(20.4 - 3.97) * 1000 + 1000 =976

Ⅷ. Alarm parameters and output logic diagram

Alarm code	Type	Logic diagram
L	Absolute value low limit alarm	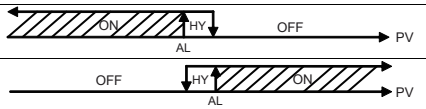
H	Absolute value high limit alarm	
Int	Interval alarm	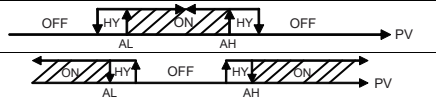
oUt	Deviation alarm	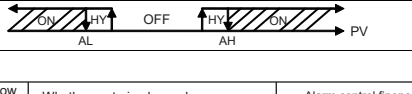

Alarm extension function table

AE1/AE2/AE3 value	Alarm mode when show over limit	Whether restrain alarm when power on	Alarm control fineness
0	State invariant	Do not inhibit (As long as it meets the requirement of alarm, alarm output)	Alarm control with highest resolution of the meter
1	Forced alarm output		
2	Forced alarm close		
3	State invariant	Inhibit (Forced alarm close when power on;alarm does not output until the alarm condition from noncoincidence to coincidence.)	
4	Forced alarm output		
5	Forced alarm close		
6	State invariant	Do not inhibit (As long as it meets the requirement of alarm, alarm output)	Alarm control with display resolution
7	Forced alarm output		
8	Forced alarm close		
9	State invariant	Inhibit (Forced alarm close when power on;alarm does not output until the alarm condition from noncoincidence to coincidence.)	
10	Forced alarm output		
11	Forced alarm close		

IX. Dimension & Installation

1. Dimension

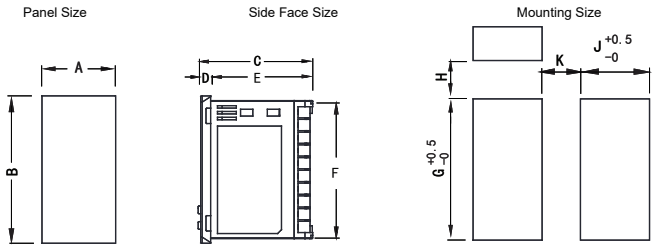

Model	A	B	C	D	E	F	G	H(Min)	J	K(Min)
4:(48*48)	48	48	73	6.5	66.5	44	45	25	45	25
6:(48*96)	48	96	73	6.5	66.5	90	91.5	25	45	25
7:(72*72)	72	72	73	6.5	66.5	66	67.5	25	67.5	25
8:(96*48)	96	48	73	6.5	66.5	44	45	25	91.5	25
9:(96*96)	96	96	73	6.5	66.5	90	91.5	25	91.5	25

2. Installation of fixed bracket

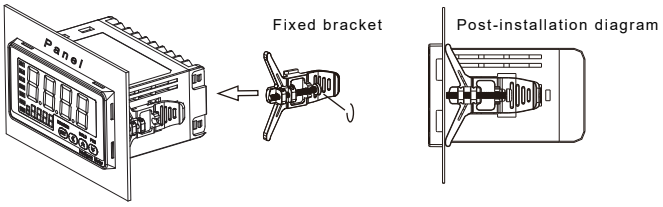

Installation method: First, embed the instrument into the pre-open installation hole, then place the fixing bracket on the installation slot of the instrument housing, and push the bracket towards the panel until it is clamped to the instrument (operation as shown in the installation diagram). If not tight enough, please tighten the fixing screw.
Disassembly method: First loosen the fixed screws, tilt up the tail of the fixed frame, and let the clamping teeth on the lower side of the fixing frame separate from the shell clamping teeth, then exit the fixing frame backward, the meter can be removed now.

3. Installation protection instruction

Waterproof gasket



The product is equipped with a waterproof gasket, and it must be installed on the product to ensure the protection level of the front panel reaches the IP54 level.

X Wiring Diagram

SF4

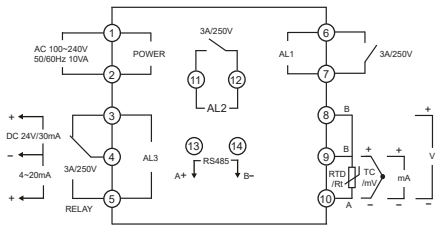

SF7

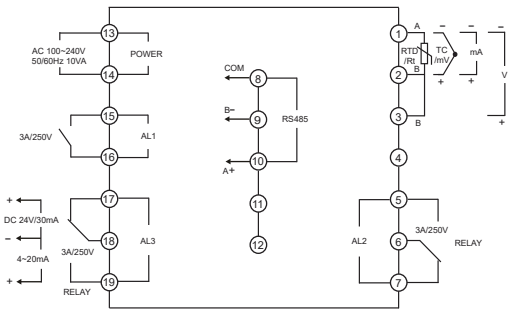

SF6/8

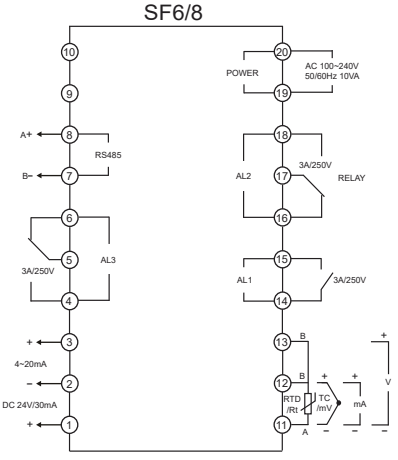

SF9

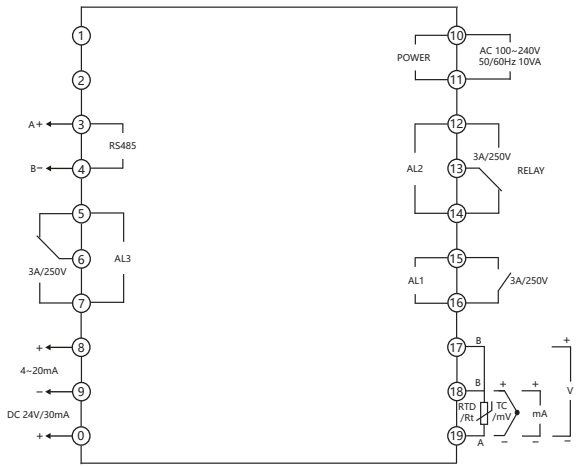

XI. Trouble -shooting

Display	Methods
HHHH/LLLL	Checks whether the input signal connects or not, whether the figure of FH/FL value is too small, whether input signal is selected correctly, whether working environment is normal.

XII. Communication procotol

Meter adopt Modbus RTU communication protocol, RS485 half duplex communication.Read function code:0x03, write function code 0x06 or 0x10. Adopts 16 digit CRC check, the meter does not return for error check.

Data frame format:

Start bit	Data bit	Stop bit	Check bit
1	8	1	No

Communication abnomal handling：for abnormal response, set the function number as the highest bit 1. E.g. if the function number requested by the host is 0x03, the corresponding function number returned by the slave should be 0x83.

Error code：

0x01---Invalid function：the function number sent by the host is not supported by the device.

0x02---Invalid address：the register address specified by the host exceeds the allowable range of the device address.

0x03---Invalid value：the write data value sent by the host exceeds the allowable range of the device.

0x04---Invalid write: Writing is not allowed when both menu and unit are locked.

The communication cycle：It refers to the time from the completion of the host data request to the completion of the slave data return. That is: communication cycle = request data send time + slave reply time + response delay time + response return time. Take the 9600 baud rate as an example: the single measurement data communication period ＞250ms.

1 Read register（0x03）

For example: Host reads integer AL1（AL1=200）

The address code of AL1 is 0x3201, because AL1 is integer(2 dyte), seizes 1 data register. The memory code of decimal integer 200 is 0x00C8.

Note:It should read DP value or confirm DP menu value first to ensure the decimal point postion when reading data,and converse the reading data to get the actual value. On the contrary ,it should converse the data to corresponding ratio first before writing the data into meter.

Host request（Read multi-register）							
1	2	3	4	5	6	7	8
Meter ADD	Function code	Start ADD High bit	Start ADD Low bit	Data byte length high bit	Data byte length low bit	CRC code low bit	CRC code high bit
0x01	0x03	0x32	0x01	0x00	0x01	0xDB	0x72

Slave normarl answer（Read multi-register）						
1	2	3	4	5	6	7
Meter ADD	Function code	Data byte number	Data high bit	Data low bit	CRC code low bit	CRC code high bit
0x01	0x03	0x02	0x00	0xC8	0xB9	0xD2

Address error abnormal answer: (For example, host request address is 0x2101)

Slave error answer				
1	2	3	4	5
Meter ADD	Function code	Error code	CRC code low bit	CRC code high bit
0x01	0x83	0x02	0xC0	0xF1

2 Write multi-register (0x06)

For example: Host writes AL1（First alarm set value 100）

The address code of AL1 is 0x3201, because AL1 is integer (2 dyte), seizes 1 data register. The hexadecimal memory code for decimal integer 100 is 0x0064.

Host request（Write single-register）							
1	2	3	4	5	6	7	8
Meter ADD	Function code	Data ADD High bit	Data ADD Low bit	Data High bit	Data Low bit	CRC code low bit	CRC code high big
0x01	0x06	0x32	0x01	0x00	0x64	0xD7	0x59

Address error abnormal answer:(for example, host request address is 0x2101)

Slave answer error code				
1	2	3	4	5
Meter ADD	Function code	Error code	CRC code low bit	CRC code high big
0x01	0x86	0x02	0xC3	0xA1

3. Write register（0x10）

For example: host writes AL1 (First alarm set value 100)

Host request（Write register）										
1	2	3	4	5	6	7	8	9	10	11
Meter ADD	Function code	Start ADD High bit	Start ADD Low bit	Data byte length high bit	Data byte length low bit	Data byte length	Data high bit	Data low bit	CRC code low bit	CRC code high bit
0x01	0x10	0x32	0x01	0x00	0x01	0x02	0x00	0x64	0xB5	0xA9

Slave normarl answer（Write register）							
1	2	7	4	5	6	7	8
Meter ADD	Function code	Start ADD High bit	Start ADD Low bit	Data byte length high bit	Data byte length low bit	CRC code low bit	CRC code high bit
0x01	0x10	0x32	0x01	0x00	0x01	0x5E	0xB1

Data location error response:(For example:Host request write ADD index is 0x2100)

Slave answer error code				
1	2	3	4	5
Meter ADD	Function code	Error code	CRC code low bit	CRC code high bit
0x01	0x90	0x02	0xCD	0xC1

Address mapping table

No.	Mapping address	Variable name	Register no.	Read / write permission	Note
1	0x0000	Mapping address 1	1	—	1. Read-write register data configured in addresses 0x3500 ~ 0x3513. 2. Read-write permission follows the mapped registers.
2	0x0001	Mapping address 2	1	—	
3	0x0002	Mapping address 3	1	—	
4	0x0003	Mapping address 4	1	—	
5	0x0004	Mapping address 5	1	—	
6	0x0005	Mapping address 6	1	—	
7	0x0006	Mapping address 7	1	—	
8	0x0007	Mapping address 8	1	—	
9	0x0008	Mapping address 9	1	—	
10	0x0009	Mapping address 10	1	—	
11	0x000A	Mapping address 11	1	—	
12	0x000B	Mapping address 12	1	—	
13	0x000C	Mapping address 13	1	—	
14	0x000D	Mapping address 14	1	—	
15	0x000E	Mapping address 15	1	—	
16	0x000F	Mapping address 16	1	—	
17	0x0010	Mapping address 17	1	—	
18	0x0011	Mapping address 18	1	—	
19	0x0012	Mapping address 19	1	—	
20	0x0013	Mapping address 20	1	—	
Inaccessible					
21	0x3000	PV Measure value	1	R	Collocate with DP value to read value
22	0x3001	MAX Maximum measure value	1	R	Collocate with DP value to read value
23	0x3002	MIN Minimum measure value	1	R	Collocate with DP value to read value
24	0x3003	HOLD Hold measured value	1	R	Collocate with DP value to read value
25	0x3004	STA Output status word	1	R	Note ①(Page 9)
Reserve					
26	0x3100	FL Measuring range low limit	1	R/W	Collocate with DP value to read value
27	0x3101	FH Measuring range high limit	1	R/W	
28	0x3102	INP Input signal type	1	R/W	Refer to measure signal parameter table(Page 2)
29	0x3103	DP Decimal point	1	R/W	Effective for all quantities-related parameter
30	0x3104	UNIT Unit setting	1	R/W	Refer to symbol table (Page 3)
31	0x3105	PS Translation correct	1	R/W	Collocate with DP value to read value
32	0x3106	CAS limit point display value setting	1	R/W	Set the low input point corresponding display value
33	0x3107	CAK high point display value setting	1	R/W	Set the high input point corresponding display value
34	0x3108	FT Filter constants	1	R/W	1~255
35	0x3109	DREF Display refresh cycle	1	R/W	0~5
36	0x310A	SCUT Small Signal Elimination	1	R/W	Collocate with DP value to read value
37	0x310B	PSb Zero clearing value	1	R/W	
38	0x310C	oSL Display method option	1	R/W	Refer to menu illustration (Page 4)
39	0x310D	LDSP Lower line display content option	1	R/W	Non(0)、Unit(1)、AL1(2)、AL2(3)、AL3(4)
40	0x310E	STEP Display jumping interval	1	R/W	Set the minimum step value of display change
41	0x310F	MME Maximum/minimum value record function	1	R/W	0:N；1:Y
42	0x3110	MEMO Enable power failure memory	1	R/W	0:N；1:Y
43	0x3111	SQRT Enable linear signal square root	1	R/W	0:N；1:Y
44	0x3112	CJC Thermocouple cold end compensation method	1	R/W	-1: Auto compensation、0: No compensation、(1~50) Manual input cold end temperature
45	0x3113	RLMR linear resistance value	1	R/W	Unit: mOhm
46	0x3114	HE current value lock function	1	R/W	0:N；1:Y
47	0x3115	LGT brightness adjustment	1	R/W	1~8
48	0x3116	PSM PS mode switch	1	R/W	0:Display offset correction 1:Stop showing measured value. Display value is written directly to PS register, display shows exactly the written value.
Reserve					
49	0x3200	AD1 1st loop alarm mode	1	R/W	0: no alarm 1:L 2:H 3:Int 4:Out
50	0x3201	AL1 1st loop alarm value	1	R/W	FL~FH Collocate with DP value to read value
51	0x3202	AH1 1st alarm interval high limit value	1	R/W	

Continued

No.	Mapping address	Variable name	Register no.	Read / write permission	Note
52	0x3203	HY1 1st loop alarm backlash value	1	R/W	0~1000 Collocate with DP value to read value
53	0x3204	AE1 1st loop alarm extended function	1	R/W	Refer to alarm extention table (Page 9)
54	0x3205	DL1A 1st loop alarm start delay	1	R/W	10 corresponding to 1.0 s
55	0x3206	DL1B 1st loop alarm close delay	1	R/W	10 corresponding to 1.0 s
56	0x3207	AD2 2nd loop alarm type	1	R/W	0:no alarm 1:L 2:H 3:Int 4:Out
57	0x3208	AL2 2nd loop alarm value	1	R/W	FL~FH Collocate with DP value to read value
58	0x3209	AH2 2nd alarm interval high limit value	1	R/W	
59	0x320A	HY2 2nd loop alarm backlash value	1	R/W	0~1000 Collocate with DP value to read value
60	0x320B	AE2 2nd loop alarm extended function	1	R/W	Refer to alarm extention table (Page 9)
61	0x320C	DL2A 2nd loop alarm start delay	1	R/W	10 corresponding to 1.0 s
62	0x320D	DL2B 2nd loop alarm close delay	1	R/W	10 corresponding to 1.0 s
63	0x320E	AD3 3rd loop alarm type	1	R/W	0:no alarm 1:L 2:H
64	0x320F	AL3 3rd loop alarm value	1	R/W	FL~FH Collocate with DP value to read value
65	0x3210	AH3 3rd alarm interval high limit value	1	R/W	
66	0x3211	HY3 3rd loop alarm backlash value	1	R/W	0~1000 Collocate with DP value to read value
67	0x3212	AE3 3rd loop alarm extended function	1	R/W	Refer to alarm extention table (Page 9)
68	0x3213	DL3A 3rd loop alarm start delay	1	R/W	10 corresponding to 1.0 s
69	0x3214	DL3B 3rd loop alarm close delay	1	R/W	10 corresponding to 1.0 s
Reserve					
70	0x3301	BRL analog output low limit	1	R/W	FL~FH Collocate with DP value to read value
71	0x3302	BRH analog ouptut high limit	1	R/W	FL~FH Collocate with DP value to read value
72	0x3303	OLL analog output low limit adjustment	1	R/W	-500~1000
73	0x3304	OLH analog output low limit adjustment	1	R	0~1050
74	0x3305	TESE Analog input test enable	1	R	0:close、1:open
75	0x3306	TEST Analog input test	1	R/W	Analog display input, test output function
76	0x3307	BRM Analog output	1	R/W	0:PV analog output 1:SV analog output
77	0x3400	LCK Lock	1	R/W	When LCK=11, other parame -ter can not be written
78	0x3401	ADDR Meter communication address	1	R/W	1~255
79	0x3402	BAUD Baud rate	1	R/W	0: 4.8K, 1: 9.6K, 2: 19.2K, 3: 38.4K 4: 57.6K, 5: 15.2K
80	0x3403	DTC Communication configuration byte	1	R/W	Note②(Page 9)
81	0x3404	NAME meter name	1	R	208
82	0x3405	VER Software version code	1	R	
83	0x3406	PRTY Parity check	1	R/W	0: No check 1: Odd check 2: Even check
Reserve					
84	0x3500	Mapping address 1	1	R/W	Default as 0x3000 (PV)
85	0x3501	Mapping address 2	1	R/W	Default as 0x3004 (STA)
86	0x3502	Mapping address 3	1	R/W	Default as 0x3201 (AL1)
87	0x3503	Mapping address 4	1	R/W	Default as 0x3208(AL2)
88	0x3504	Mapping address 5	1	R/W	Default as 0x320F (AL3)
89	0x3505	Mapping address 6	1	R/W	Default as 0x3100 (FL)
90	0x3506	Mapping address 7	1	R/W	Default as 0x3101 (FH)
91	0x3507	Mapping address 8	1	R/W	Default as 0x3102 (INP)
92	0x3508	Mapping address 9	1	R/W	Default as 0x3103 (DP)
93	0x3509	Mapping address 10	1	R/W	Default as 0x3105 (PS)
94	0x350A	Mapping address 11	1	R/W	Default as 0x3106 (CAS)
95	0x350B	Mapping address 12	1	R/W	Default as 0x3107 (CAK)
96	0x350C	Mapping address 13	1	R/W	Default as 0x310D (LDSP)
97	0x350D	Mapping address 14	1	R/W	Default as 0x310A (SCUT)
98	0x350E	Mapping address 15	1	R/W	Default as 0x310C (oSL)
99	0x350F	Mapping address 16	1	R/W	Default as 0x310F (MME)
100	0x3510	Mapping address 17	1	R/W	Default as 0x3114 (HE)
101	0x3511	Mapping address 18	1	R/W	Default as 0x3001 (MAX)
102	0x3512	Mapping address 19	1	R/W	Default as 0x3002 (MIN)
103	0x3513	Mapping address 20	1	R/W	Default as 0x3003 (HOLD)
Inaccessible					
104	0x3600	Unser menu MU1 Configuration	1	R/W	Configure by writing menu sequence numbers from the tables in *Regular Menu Description* and *Advanced Menu Description*.
105	0x3601	Unser menu MU2 Configuration	1	R/W	
106	0x3602	Unser menu MU3 Configuration	1	R/W	
107	0x3603	Unser menu MU4 Configuration	1	R/W	
108	0x3604	Unser menu MU5 Configuration	1	R/W	
109	0x3605	Unser menu MU6 Configuration	1	R/W	
110	0x3606	Unser menu MU7 Configuration	1	R/W	
111	0x3607	Unser menu MU8 Configuration	1	R/W	

R: Read only; R/W: Read/Write

Note①: measurement status indication, when data byte is 1, it means execution; when data byte is 0, it means no execution.

D7	D6	D5	D4	D3	D2	D1	D0
HHHH	LLLL	MIN	HOLD	MAX	AL3	AL2	AL1

Note②: DTC communication configuration byte illustration

DTC: □ □ □
- One place, respon delay: 0 ~ 9 respectively stand for 10 ~ 100ms
- Tens place, byte transfer sequence: when it is 0, from high to low; when it is 1, from low to high
- Hundreds place, reserve

※16 digit CRC check code to get C program

```
unsigned int Get_CRC(uchar *pBuf, uchar num)
{
    unsigned i,j;
        unsigned int wCrc = 0xFFFF;
        for(i=0; i<num; i++)
        {
                wCrc ^= (unsigned int)(pBuf[i]);
                for(j=0; j<8; j++)
                {
                        if(wCrc & 1){wCrc >>= 1; wCrc ^= 0xA001; }
                        else
                                wCrc >>= 1;
                }
        }
    return wCrc;
}
```

XIII Version & Revision History

Date	Version	Modification
2026.09.29	A/0 ver	1st edition

If the equipment is used in a way not specified by this manual, the protection function may be impaired.